DEATH NODE 2.0

REPORT: DEBTSENSE AI

PREPARED BY:

NAME
KISHARINI A/P JEEVA NATHAN
SAMANTHA TIONG CHER RYNN
YUVITHA SURESH
NURIL NUHA BINTI ISMAIL

PREPARED FOR: BORNEO HACKWKND

SUBMISSION DATE: 13 MARCH 2026

Table of Contents

Table of Contents **2**
1.0 Introduction **3**
1.1 Problem Statement 4
1.2 Proposed Solution 4
1.3 Stakeholders 5
1.4 Business Model 6
1.4.1 Revenue Model 6
1.4.2 Value Proposition 7
1.4.3 Target Customers and Market Segment 7
2.0 Review on Existing Solutions **8**
2.1 Example Existing Solution 8
2.2 Gaps in Existing Solution 8
2.3 How DebtSense AI Fills The Gap 9
3.0 Methodology **10**
3.1.1 System Architecture 10
3.1.2 Data Collection 11
3.2 AI Analysis Method 11
3.3 System Development Tools 12
4.0 Results **13**
4.1 System Implementation 13
4.2 AI Model Performance 13
4.3 Chatbot Functionality 14
4.4 User Interface and Usability 14
5.0 Prototype **15**
6.0 AI Acknowledgement **19**
7.0 Conclusion **20**

1.0 Introduction

This Software Development Plan describes the development approach for **DebtSense AI**, a financial awareness application designed to help young people, especially university students and fresh graduates, understand and manage debt responsibly.

Nowadays, many young adults frequently use e wallets, online shopping platforms, and Buy Now Pay Later services. While these systems make purchasing easier, they can also lead to overspending. Many students buy things to follow trends or maintain a certain lifestyle without realizing the long-term financial impact, such as interest charges and accumulated debt.

Debt Sense AI aims to solve this problem by using artificial intelligence to analyze user spending habits, lifestyle patterns, and financial behavior. The system will generate a debt risk score, warn users about possible debt traps, and visually explain how interest and installment payments work.

The application will also include an AI financial coach chatbot that can guide users in managing their monthly expenses and creating a suitable spending plan based on their budget. The goal of this system is to increase financial awareness and help young people make better financial decisions.

1.1 Problem Statement

Students and fresh graduates often face financial freedom for the first time and may overspend on shopping, food delivery, gadgets, and lifestyle trends. Social media and peer influence, combined with easy access to digital payments and Buy Now Pay Later (BNPL) services, make it easy to spend without understanding the long-term consequences. Many young users do not realize how interest, installment payments, and late fees can accumulate, which can lead to debt. Existing finance apps mainly track expenses but do not provide warnings about risky spending.

DebtSense AI addresses this problem by analyzing spending patterns, e-wallet transactions, and BNPL usage to generate a debt risk score, provide warnings for risky behavior, visually explain interest and installments, and offer personalized budgeting advice through an AI financial coach chatbot. The chosen Sustainable Development Goals are SDG 4: Quality Education and SDG 8: Decent Work and Economic Growth. This can be seen as DebtSense is used to promote financial literacy among university students and young adults and responsible for teaching financial management while reducing debt risks among young adults.

1.2 Proposed Solution

DebtSense AI is an AI-powered financial awareness platform designed to help students and young adults understand their spending habits and reduce the risk of falling into debt. The system analyzes common financial behaviors that lead to overspending, such as high spending relative to income, frequent use of Buy Now Pay Later (BNPL) services, and late payments.

The application collects basic financial inputs from users, including monthly income, total spending, BNPL usage frequency, and late payment history. These indicators are analyzed using a machine learning model to generate a debt risk score, which estimates the user's financial risk. The score is categorized into levels such as low, moderate, or high to help users quickly understand their financial situation.

The system also provides visual explanations of interest, installment payments, and late fees, helping users understand how debt can accumulate over time.

In addition, DebtSense AI includes an AI Financial Coach chatbot that provides personalized budgeting advice and financial guidance. The chatbot helps users manage expenses and plan their monthly spending.

By combining financial behavior analysis, machine learning predictions, and AI-driven guidance, DebtSense AI helps users identify potential debt risks early and make better financial decisions.

1.3 Stakeholders

Stakeholder identification and analysis are important in project management to ensure that all individuals or groups who have an interest in the project are considered during development. For **DebtSense AI**, stakeholders help define the system requirements, provide feedback, and ensure the solution meets user needs. Clearly defining each stakeholder's role and influence helps the team manage expectations, reduce risks, and deliver a system that is useful, reliable, and easy for students and young adults to use.

Stakeholder Group	Role in Project	Influence Level	Project Focus
Development Team	Responsible for designing, coding, testing, and integrating all features of DebtSense AI, including AI analysis, chatbot, and visualizations	High	Managing sprint development, implementing features from the product backlog, and continuously improving the system through iterative development
Target Users (Students & Youth)	Actively test the app, provide feedback on features, usability, and relevance, and report issues or improvement ideas	High	Providing user feedback during testing phases to help refine features, improve user experience, and ensure the application meets real financial awareness needs

Hackathon Judges / Organizers	Evaluate the project idea, innovation, and implementation during the competition	Medium	Assessing the functionality, creativity, and practical value of the solution during project demonstrations and presentations
Financial Service Platforms (Future Stakeholders)	Potential partners that could provide secure financial data or integration with e-wallets and BNPL services in the future	Low Medium	Supporting potential system integration and improving financial data accuracy for better AI analysis in future system development

Table 1.3.1 Stakeholders Table

1.4 Business Model

The business model for **DebtSense AI** is designed to be affordable, scalable, and sustainable, specifically targeting university students and young adults who frequently use digital payment platforms and Buy Now Pay Later (BNPL) services. This demographic often lacks financial literacy and access to personalized guidance, creating a need for an AI-powered solution that is intuitive, engaging, and accessible. DebtSense AI leverages a mobile platform to deliver AI-driven insights and financial coaching that help users understand debt risks and make informed financial decisions.

1.4.1 Revenue Model

1. Freemium Subscription: Basic features free: spending tracking, debt risk scoring, interest visualization.
2. Premium features paid: AI financial coaching, detailed budgeting tools, personalized recommendations.
3. Partnerships: Banks, fintechs, e-wallet providers for sponsorships and feature integration.
4. Educational Licensing: Universities and student organizations license the platform as a financial literacy tool.
5. Data Insights: Aggregated, anonymized user data shared with partners for research and financial education.

1.4.2 Value Proposition

For Users:

DebtSense AI helps young adults make smarter financial decisions. It provides an AI-driven debt risk score, visualizes how interest, installments, and late fees accumulate, and offers a chatbot for personalized budgeting advice. Preventive alerts warn users of risky spending before it leads to debt.

For Partners:

The platform gives aggregated insights on spending habits to support financial literacy programs. Partners like fintech companies, banks, and universities can promote responsible financial behavior and engage their users effectively.

1.4.3 Target Customers and Market Segment

Primary Users:

University students and fresh graduates (18–25) who use e-wallets, online shopping, or BNPL services. They are at risk of overspending due to limited financial literacy.

Secondary Users / Partners:

Fintech companies, banks, e-wallet providers, and educational institutions aiming to promote financial literacy and responsible spending.

Market Focus:

Initially, tech-savvy urban young adults, with potential to expand to a broader youth demographic, including international students.

2.0 Review on Existing Solutions

Several financial management and expense tracking apps are widely used by students and young adults to monitor spending and manage budgets. These solutions help users understand where their money goes but have limitations in predicting debit risk and offering proactive financial guidance.

2.1 Example Existing Solution

Existing Solutions	Strengths	Limitations
Money Lover	Offers clear reports on spending, budget controls, and debt management reminders.	Still primarily focused on tracking and budgeting, does not provide predictive debt risk scoring, visual debt impact explanations, or AI-driven coaching
Wallet	Provides strong tracking tools and spending reports, visualizes daily, weekly, and monthly budgets.	Focuses on expense tracking and budgeting rather than warning users about potential debt or interpreting interest/BNPL patterns.
Wally	Intuitive interface with basic expense tracking and budget planning features.	Does not proactively alert users about risky spending or explain long-term debt consequences, limited personalized guidance on debt management.
Touch `n Go eWallet	Highly convenient for everyday transactions and peer-to-peer transfers, widely accepted across retail and services.	Primarily a payment platform rather than a budgeting or financial advisory app, offers transaction history but does not provide analytical insights, debt risk scoring, or personalized financial planning

Table 2.1.1 Existing Solutions Table

2.2 Gaps in Existing Solution

Although these popular tools support spending tracking, budgeting, and transaction logging, they generally do not provide proactive warnings about potential debt risk or predictive insights into how interest, installments, and late fees accumulate. Moreover, none of these

solutions offer AI-driven personalized financial coaching to help users modify behavior or avoid debt traps, a critical need for students and first-time earners.

2.3 How DebtSense AI Fills The Gap

DebtSense AI addresses these gaps by providing a comprehensive solution for young adults. The platform evaluates risky spending patterns through a debt risk score, visually explains how interest, installments, and late fees accumulate over time, and offers an AI financial coach chatbot for personalized budgeting and spending guidance. Additionally, it delivers preventive alerts to warn users before they fall into financial problems, helping them make better financial decisions and avoid debt traps

3.0 Methodology

3.1 Development Approach

The development of DebtSense AI follows the Agile software development approach, specifically using the Scrum framework. Agile was selected because it allows the team to work in short and flexible development cycles, making it suitable for rapid prototyping and continuous improvement.

The project was developed over a few weeks, with the development process divided into short iterations known as sprints. In each sprint, specific system features were designed, implemented, and tested. This approach allowed the team to gradually build key functionalities such as spending analysis, debt risk scoring, and the AI financial coach chatbot.

Using the Agile approach also encourages team collaboration, quick feedback, and adaptability, which are important for developing innovative solutions in a limited time frame. Continuous testing and improvements were carried out throughout the development process to ensure that the system remains functional, user-friendly, and aligned with the project objectives.

3.1.1 System Architecture

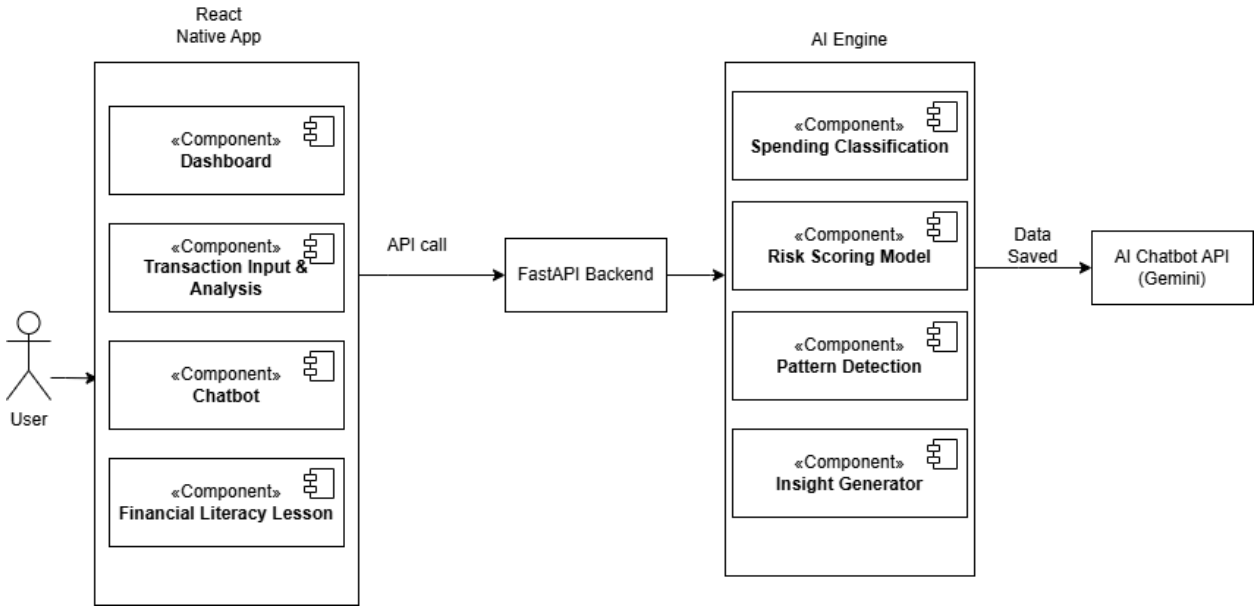

Figure 3.1.1.1 shows the system architecture of DebtSense where the user interacts with the frontend. FastAPI is used as the backend to allow the data flow to and from the user interface and AI engine. The data processed in the AI engine is used to teach the AI chatbot to curate more personalized answers.

3.1.2 Data Collection

DebtSense AI collects several key financial indicators to evaluate debt risk.

The main data collected includes:

1. Monthly income
2. Spending ratio (spending compared to income)
3. BNPL usage frequency
4. Late payment history

Users manually input their financial information through the mobile application. The system calculates the spending ratio and sends the collected data to the backend for processing.

The data is then forwarded to the AI analysis service where the model predicts the user's debt risk score. The system only collects essential financial indicators and does not require sensitive banking information to maintain user privacy.

3.2 AI Analysis Method

DebtSense AI uses a **Logistic Regression model** to predict a user's debt risk.

The model analyzes four main features:

- Income
- Spending ratio
- BNPL usage frequency
- Late payment history

These variables are used to estimate the probability of a user falling into debt. The output is converted into a debt risk score, which classifies users into low, moderate, or high risk.

The model is deployed using FastAPI, allowing the backend to send user financial data and receive the predicted risk score.

The system also integrates the Gemini API to power the AI Financial Coach chatbot. The chatbot provides financial advice, explains debt risks, and suggests budgeting strategies based on the user's financial behavior.

3.3 System Development Tools

Tool / Technology	Purpose in System
React Native	Used to develop the mobile application frontend and create a responsive user interface for users to input financial data and view insights
Node.js	Used as the backend server to handle API requests and manage communication between the mobile application and AI services.
Python	Used to implement the machine learning model for debt risk prediction.
FastAPI	Used to deploy the Logistic Regression model and provide an API for the backend to request risk score predictions.
Gemini API	Used to power the AI Financial Coach chatbot that provides financial advice and budgeting guidance.
Git	Used for version control and collaboration among the development team during the project development.

Table 3.3.1 System Development Tools Table

4.0 Results

4.1 System Implementation

The development of DebtSense AI successfully produced a working prototype of a financial awareness application designed to help young adults better understand their spending behaviour and potential debt risks. The system integrates several core components including a mobile application interface, a backend service service, a machine learning model for debt risk prediction, and an AI financial coach chatbot.

The mobile application allows users to input basic financial information such as monthly income, total spending, BNPL usage frequency, and late payment history. Once the data is submitted, the system processes the information through the backend and sends it to the machine learning model for analysis. The logistic regression model then generates a debt risk score, which is categorised into low, moderate, or high risk.

The results are displayed to the user through a clear and simple dashboard interface. Users are able to view their debt risk level and receive explanations about how their financial behaviour may affect their risk of falling into debt. The system also provides visual explanations showing how interest rates, installment payments, and late fees can accumulate over time.

4.2 AI Model Performance

The logistic regression model was implemented to estimate the probability of a user experiencing financial risk based on several financial indicators. The model analyses four key features: income, spending ratio, BNPL usage frequency, and late payment history.

Testing results indicate that the model is able to produce consistent risk predictions based on the provided inputs. Users with higher spending ratios, frequent BNPL usage, and a history of late payments generally receive higher risk scores. This demonstrates that the model is able to identify common patterns associated with risky financial behaviour.

Although the model is designed as a simplified prediction system for demonstration purposes, it successfully illustrates how machine learning can be used to generate financial insights and raise awareness about potential debt risks.

4.3 Chatbot Functionality

The AI Financial Coach chatbot successfully integrated the **Google Gemini API** developed by Google. The chatbot provides users with basic financial guidance, budgeting tips, and explanations related to debt management.

Users can interact with the chatbot to ask questions about budgeting strategies, spending habits, and debt risks. The chatbot responds with suggestions such as reducing unnecessary spending, setting monthly budgets, and understanding the impact of interest on installment payments.

The chatbot enhances the overall user experience by providing interactive financial guidance and encouraging users to make more responsible financial decisions.

4.4 User Interface and Usability

The mobile application interface was developed using **React Native**, allowing the system to provide a clean and user-friendly system. Testing results show that users are able to easily navigate through the application and understand the financial insights presented.

Key interface features include:

1. Simple data input forms for financial information
2. Clear visualisation of debt risk scores
3. Explanations of interest and installment calculations
4. Interactive chatbot support for financial advice

These features help make the application accessible and easy to understand, especially for university students who may have limited financial knowledge.

5.0 Prototype

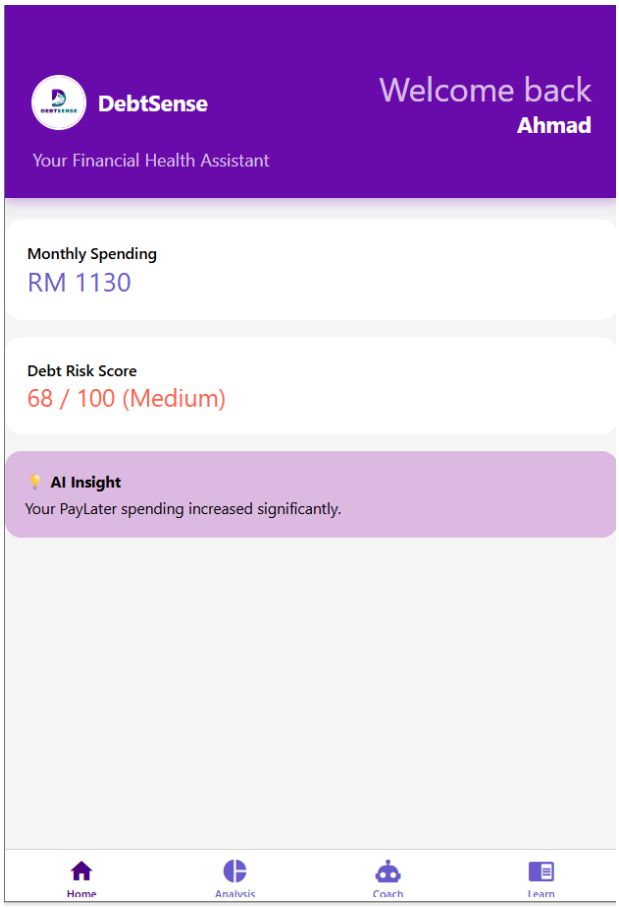

Figure 5.1 DebtSense AI Homepage

Figure 5.1 shows the homepage of DebtSense after the user logs in. In this screen the total monthly spending is displayed and the risk score of debt occurrence is calculated and displayed with a label of either high, medium or low risk. An insight generated from the machine learning model is displayed according to the calculated debt risk score and the amount of money spent in Buy Now Pay Later services.

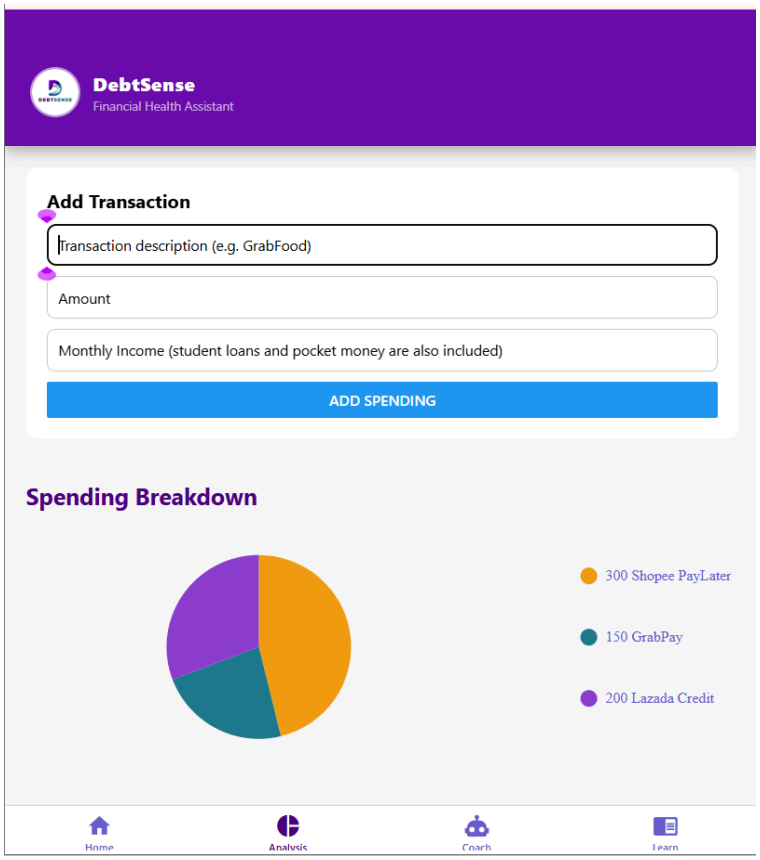

Figure 5.2 Spending Analysis Page

Figure 5.2 shows the spending behaviour analysis page where the user is required to enter the transactions made, the amount spent on each transaction and the total monthly income before each transaction was made. The spending breakdown will be automatically updated in a pie chart according to 4 main categories which are food, shopping, entertainment and transportation. Under shopping, BNPL services are also considered.

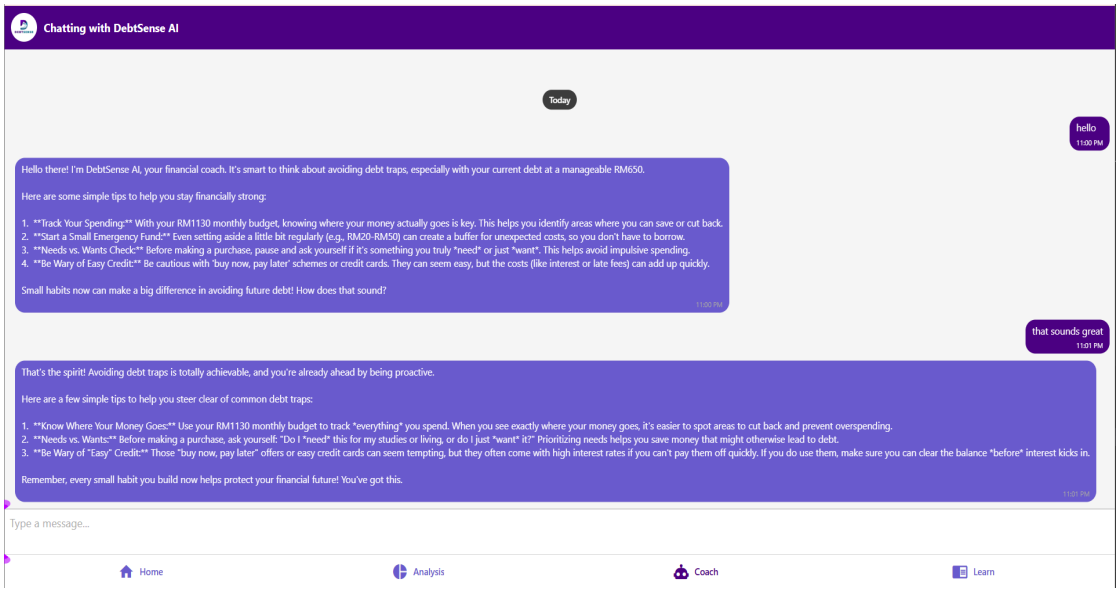

Figure 5.3 DebtSense Chatbot Page

Figure 5.3 shows the DebtSense chatbot or also known as financial coach where users can ask about financial advice that are curated according to their monthly spending behaviours and patterns to allow for a more personalized approach in providing financial advice.

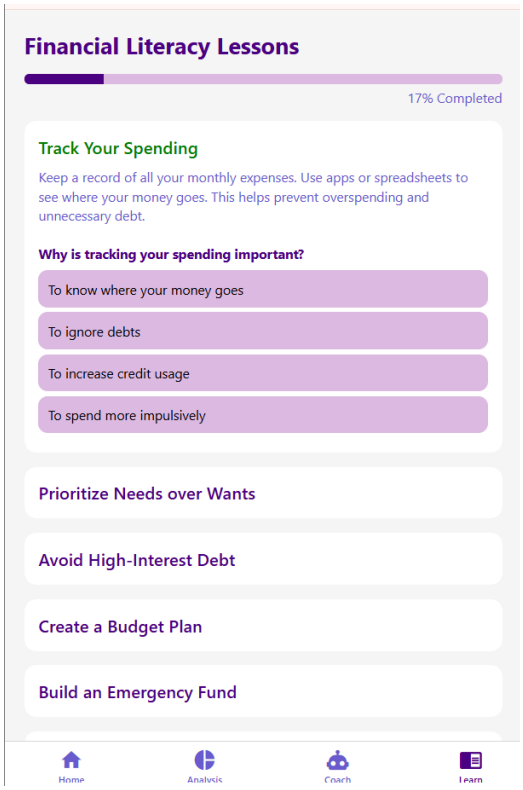

Figure 5.4 Financial Literacy Lessons Page

Figure 5.4 shows the gamified financial literacy lesson page to allow users to test their understanding of proper spending habits, ways to avoid falling into the debt trap and how to curate our monthly budget.

6.0 AI Acknowledgement

During the preparation and development of the **DebtSense AI** project, the authors used **ChatGPT** by OpenAI and **Claude** by Anthropic to assist with language refinement, structuring of written content, and guidance for certain programming tasks. The generated outputs were carefully reviewed, revised, and validated by the authors to ensure accuracy, clarity, and originality. Additionally, the **Google Gemini API** by Google was used to support the financial coach chatbot, while a logistic regression model was implemented to predict the user's financial risk score due to its simplicity and efficiency in providing risk insights.

The authors confirm that all AI-assisted outputs were critically evaluated and modified where necessary, and they take full responsibility for the final content, implementation, and conclusions presented in this project.

7.0 Conclusion

This report has demonstrated how artificial intelligence can be applied to improve financial awareness among university students and young adults. **DebtSense AI** analyses key financial indicators such as income, spending ratio, BNPL usage frequency, and late payment history to generate a debt risk score using a logistic regression model. This allows users to better understand their financial behaviour and identify potential risks early.

In addition, the application also provides visual explanations of interest, installment payments, and late fees to help users understand how debt can accumulate over time. The integration of an AI financial coach chatbot powered by **Google Gemini API** developed by Google further enhances the system by offering interactive financial guidance and budgeting advice.

Overall, **DebtSense AI** highlights the potential of combining financial behaviour analysis, machine learning, and AI-driven guidance to support responsible financial decision-making. With further development, the system could be expanded by integrating real financial data sources, improving the prediction model with larger datasets, and adding more advanced budgeting and financial planning features to provide more personalised insights for users.